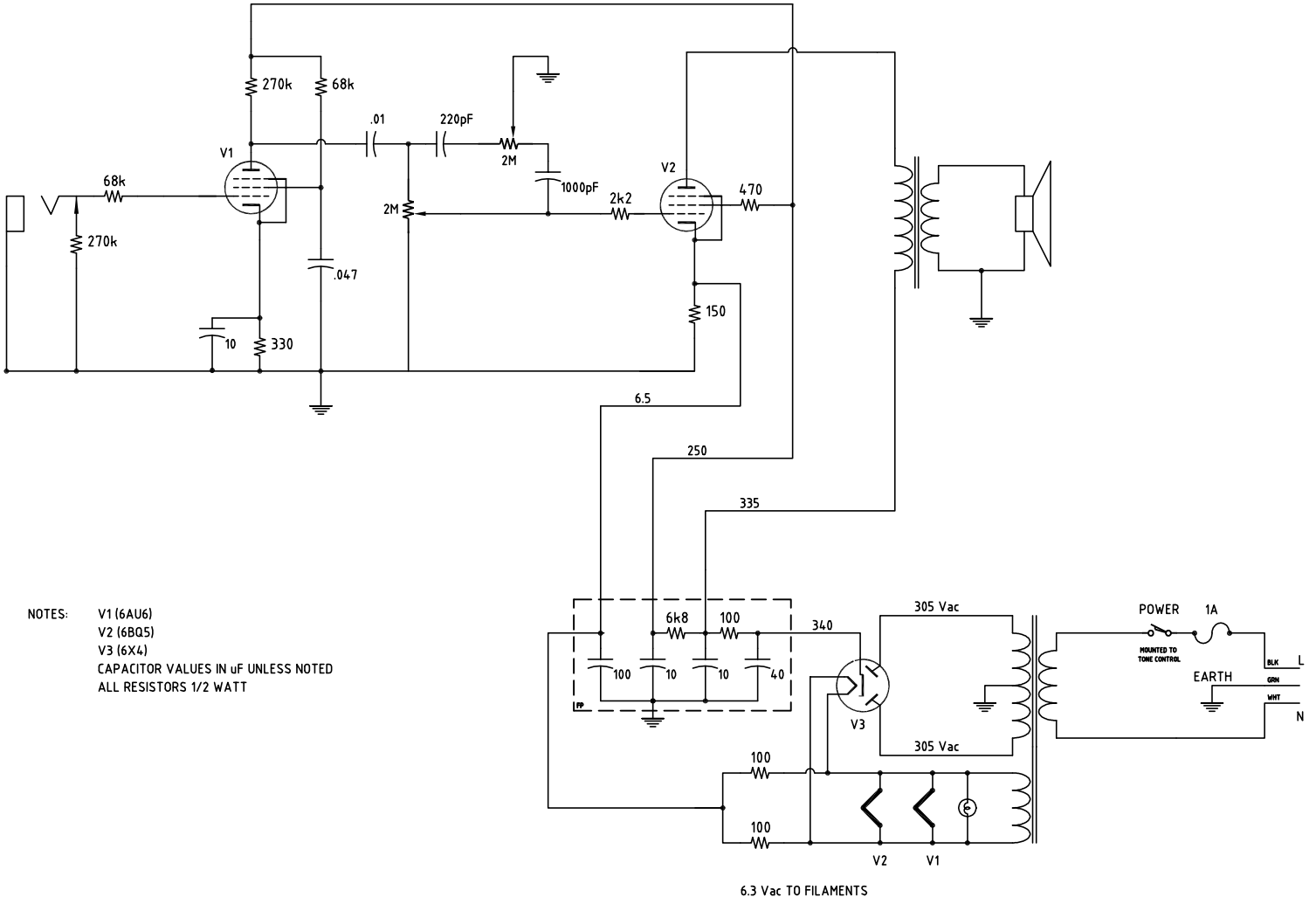

NOTES:
V1 (6AU6)
V2 (6BQ5)
V3 (6X4)
CAPACITOR VALUES IN uF UNLESS NOTED
ALL RESISTORS 1/2 WATT

Weatherford Amplifiers

SCALE: NONE		DRAWN BY: Sean Weatherford
DATE: 3/18/2003		

This schematic adapted from an existing Audiotronics Model 300A turntable amplifier.

GLOWBUG 58

DRAWING NUMBER