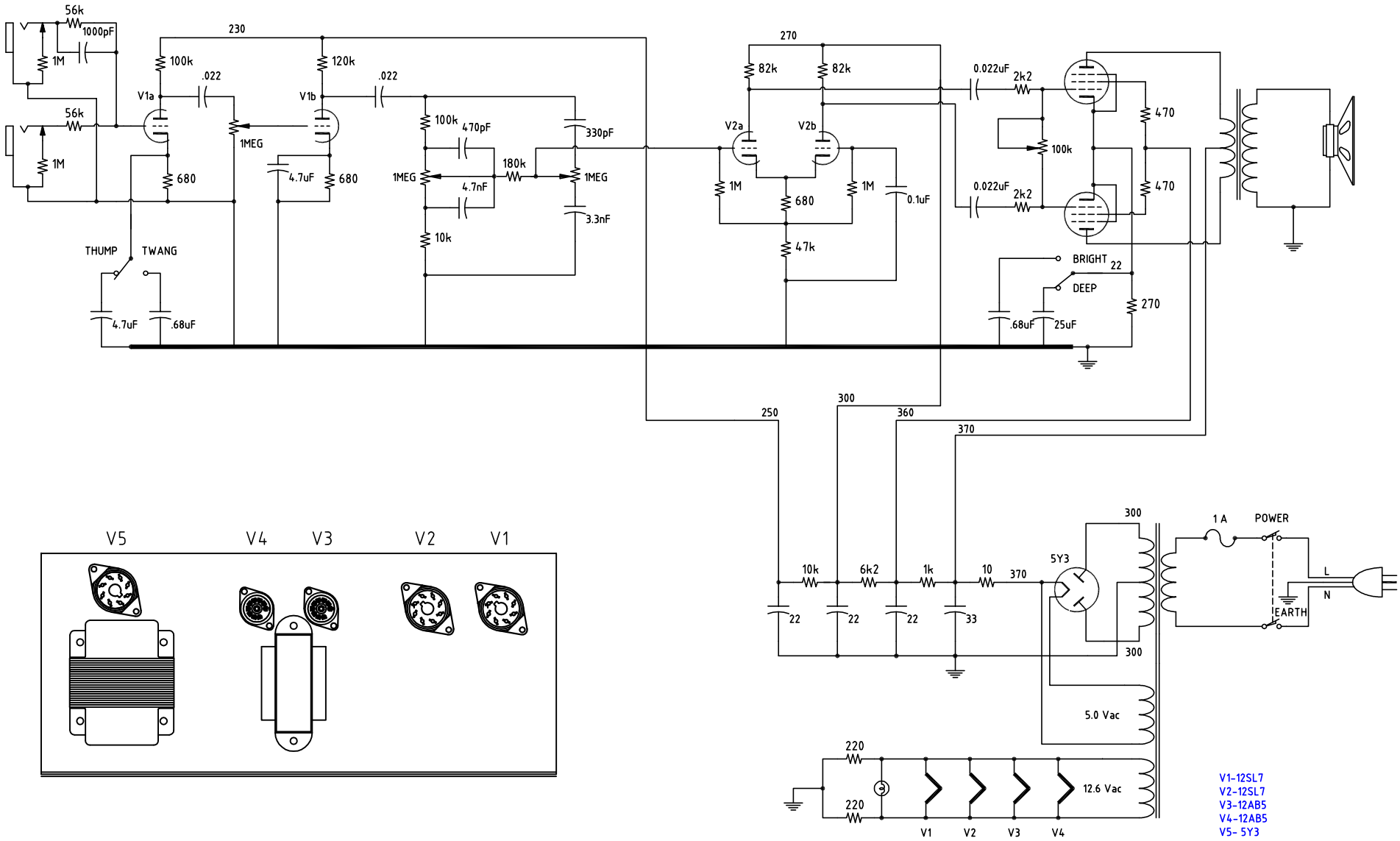

VOLTAGE CHART

	1	2	3	4	5	6	7	8	9
12SL7	-	100	2	-	120	1.6	5.7	5.7	—
12SL7									—
12AB5	320	NC	-	5.7	5.7	-	22	315	345
12AB5	320	NC	-	5.7	5.7	-	22	315	345
5Y3									—

NOTE
Transformers and sockets are 1/2 scale.
PT is a Webcor 661907
OT is a Hammond 125E

Weatherford Amplifiers

SCALE: NONE
DATE: 9/18/2003
DRAWN BY: Sean Weatherford

This schematic developed from by adapting the existing componets of a Webcor KX-1180. Weatherford Amplifiers claims no rights to any of the information contained in this drawing.

GLOWBUG 22

DRAWING NUMBER
WA-GB22-R2