ELECTRICAL THRUST PRODUCING DEVICE

Filed May 12, 1958 3 Sheets-Sheet 3

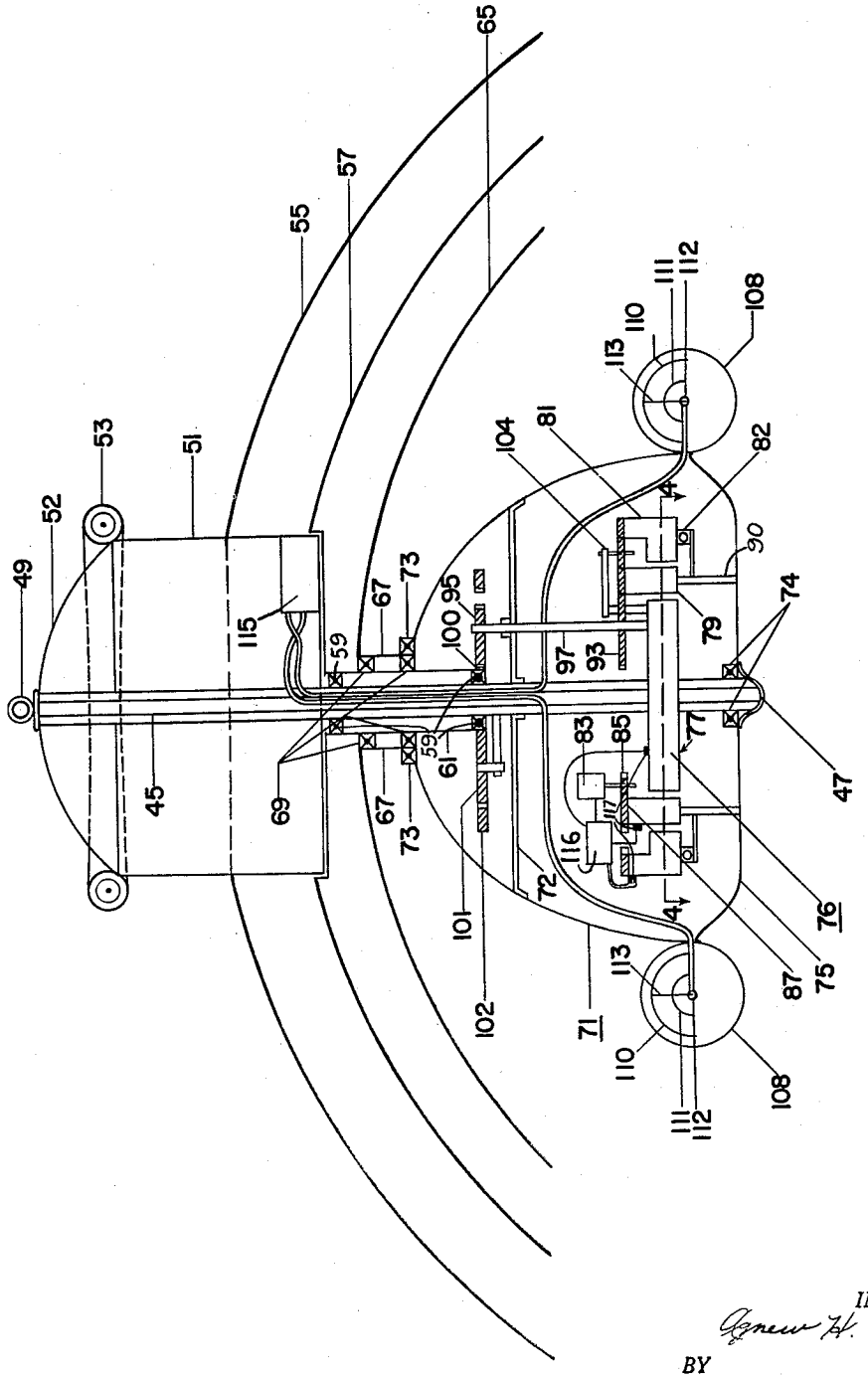

FIG. 3

INVENTOR.
Agnew H. Bahnson Jr.

BY
Watson, Cole, Grindle & Watson
Attorneys